ODL, Inc.

Simulated Divided Lite

680 Extruded PVC Frame

FOR GLAZING UP TO A 13.25" x 6'8" SINGLE PANEL "NON-IMPACT"

GENERAL NOTES

1. This product has been evaluated and is in compliance with the 8th Edition (2023) Florida Building Code (FBC) structural requirements excluding the High Velocity Hurricane Zone (HVHZ).
2. When used in areas requiring wind borne debris protection this product is required to be protected with an impact resistant covering that complies with FBC Sections 1609.1.2 & R301.2.1.2.
3. This product is approved for use as a substitute doorglass assembly in conjunction with a glazed steel or fiberglass sidelite possessing a comparable current Florida Statewide product approval.
4. The design pressure (DP) rating shall be the lesser of the DP rating shown on sheet 1 of this approval or the DP rating shown in the glazed steel or fiberglass sidelite approval being used.
5. The sidelite panel and lite opening size shall not exceed the sizes shown in this approval or the glazed steel or fiberglass sidelite approval being used.
6. This product is approved for use in the sidelite panels as specified on sheet 3 of this approval. Substitution into a similar product may be approved for use by the local Authority Having Jurisdiction. In all cases, the glazed steel or fiberglass sidelite used must possess a comparable current Florida Statewide product approval.

TABLE OF CONTENTS

SHEET#	DESCRIPTION
1	Typical elevations, design pressures and general notes
2	Frame & glazing details & bill of materials
3	Fiberglass & steel sidelite panels

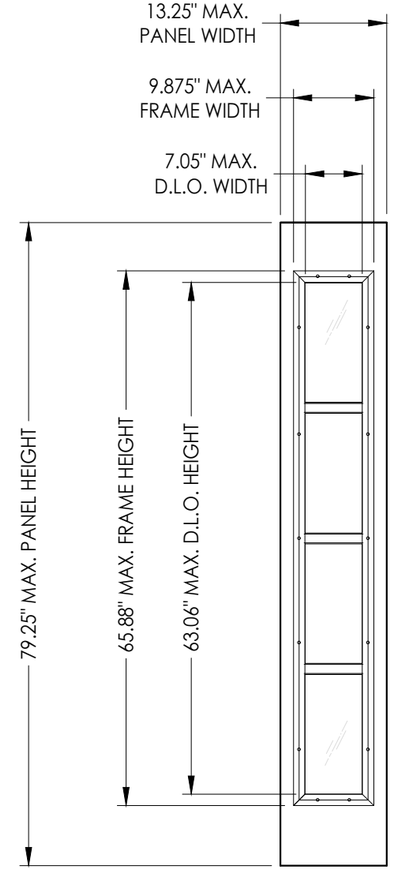

DESIGN PRESSURE RATING (PSF)		
DOOR TYPE	POSITIVE	NEGATIVE
6'- 8" Steel	+100.0	-100.0
6'- 8" Fiberglass	+100.0	-100.0

L F Schmidt

L. F. SCHMIDT
LICENSE
No. 43409
STATE OF FLORIDA
PROFESSIONAL ENGINEER

Digitally signed by Lyndon F Schmidt
Date: 2023.07.26 12:14:40 -04'00'

This item has been digitally signed and sealed by **L. F. Schmidt, P.E.** on the date adjacent to the seal.

Printed copies of this document are not considered signed and sealed and the signature must be verified on any electronic copies.

THIS PRODUCT APPROVAL IS VALID ONLY FOR THE STATE OF FLORIDA

Documents Prepared By:
Lyndon F. Schmidt
P.E. No. 43409

R.W. BUILDING CONSULTANTS, INC.
P.O. Box 230, Valrico, FL 33595
Phone No.: 813.659.9197
FBPE Registry No. 9813

PRODUCT: ODL LITE FRAME

PART OR ASSEMBLY: TYPICAL ELEVATIONS, DESIGN PRESSURES & GENERAL NOTES

NO.	DATE	REVISIONS	BY
4	7/01/23	UPDATE TO 8TH ED. (2023) FBC	LFS
3	8/05/20	UPDATE TO 7TH ED. (2020) FBC	DAC
2	9/26/17	UPDATE TO 6TH ED. (2017) FBC	JK
1	3/28/15	UPDATE TO 5TH ED. (2014) FBC	JK

DATE: 4/15/13
SCALE: N.T.S.
DWG. BY: JK
CHK. BY: LFS
DRAWING NO.: FL-15260.11
SHEET 1 OF 3

© 2013 R.W. BUILDING CONSULTANTS INC.

Z:\2023 FBC Drawings\ODL, Inc\FL-15260 R11\FL-15260.9-12.dwg

BILL OF MATERIALS		
ITEM #	DESCRIPTION	MATERIAL
1	INTERIOR FRAME	PVC
2	EXTERIOR FRAME	PVC
3	#8 X 1-1/2" PPH SMS (HI-LO THREAD)	STEEL

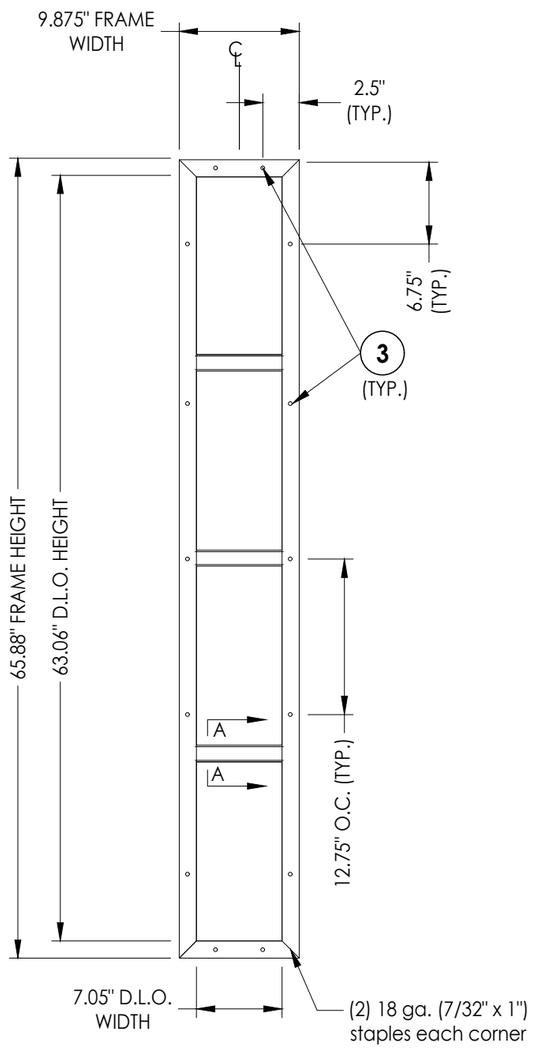

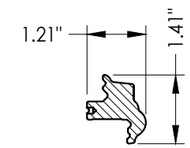

1 **INTERIOR FRAME**
Cellullar PVC

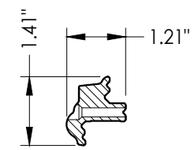

2 **EXTERIOR FRAME**
Cellullar PVC

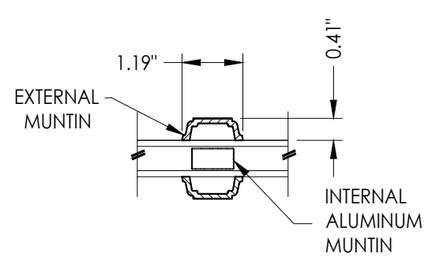

SECTION A-A

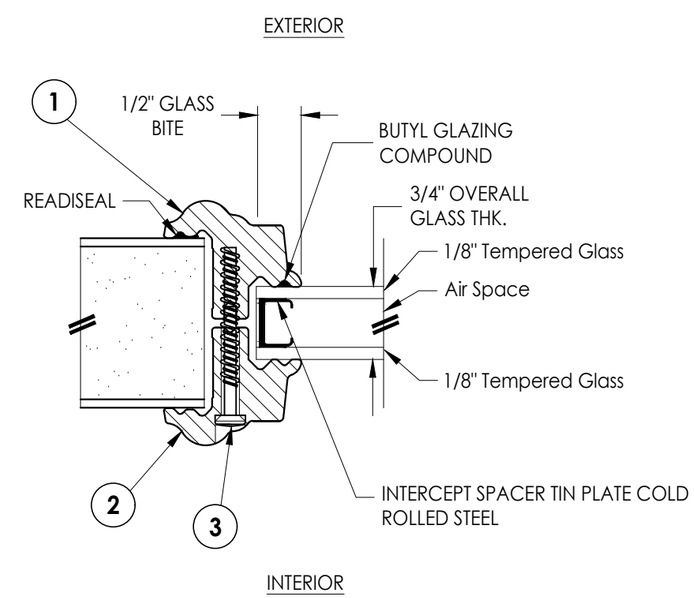

G1 ***GLAZING DETAIL***

Z:\2023 FBC Drawings\ODL, Inc\FL-15260 R11\FL-15260.9-12.dwg

Documents Prepared By:
Lyndon F. Schmidt
P.E. No. 43409
RW BUILDING CONSULTANTS, INC.
P.O. Box 230, Valrico, FL 33595
Phone No.: 813.659.9197
FBPE Registry No. 9813

PRODUCT: ODL LITE FRAME

PART OR ASSEMBLY: FRAME & GLAZING DETAILS & BILL OF MATERIALS

NO.	DATE	REVISIONS	BY
4	7/01/23	UPDATE TO 8TH ED. (2023) FBC	LFS
3	8/05/20	UPDATE TO 7TH ED. (2020) FBC	DAC
2	9/26/17	UPDATE TO 6TH ED. (2017) FBC	JK
1	3/28/15	UPDATE TO 5TH ED. (2014) FBC	JK

DATE: 4/15/13
SCALE: N.T.S.
DWG. BY: JK
CHK. BY: LFS
DRAWING NO.: FL-15260.11
SHEET 2 OF 3

© 2013 R.W. Building Consultants Inc.

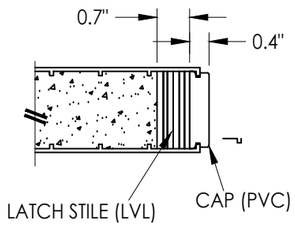

SECTION A-A

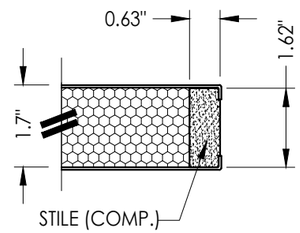

SECTION C-C

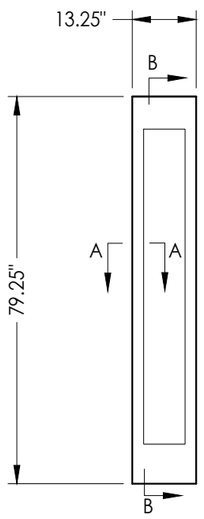

FIBERGLASS SIDELITE PANEL
Plastpro 6' 8"

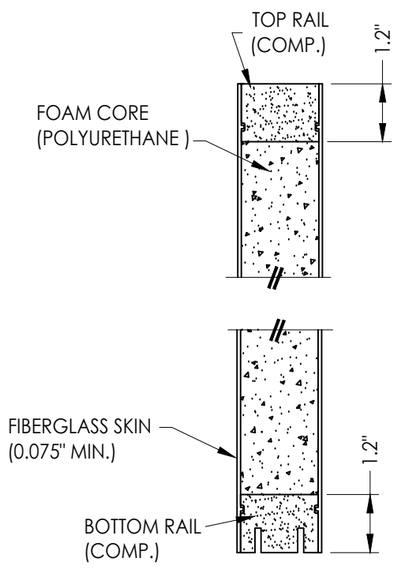

SECTION B-B

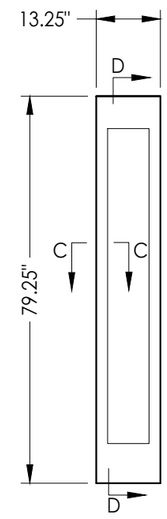

STEEL SIDELITE PANEL
Masonite 6' 8"

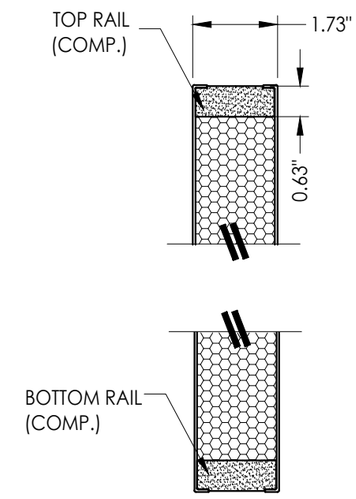

SECTION D-D

Documents Prepared By:
Lyndon F. Schmidt
P.E. No. 43409

R.W. BUILDING CONSULTANTS, INC.
P.O. Box 230, Valrico, FL 33595
Phone No.: 813.659.9197
FBPE Registry No. 9813

PRODUCT: ODL LITE FRAME

PART OR ASSEMBLY: FIBERGLASS & STEEL SIDELITE PANELS

NO.	DATE	REVISIONS	BY
4	7/01/23	UPDATE TO 8TH ED. (2023) FBC	LFS
3	8/05/20	UPDATE TO 7TH ED. (2020) FBC	DAC
2	9/26/17	UPDATE TO 6TH ED. (2017) FBC	JK
1	3/28/15	UPDATE TO 5TH ED. (2014) FBC	JK

DATE: 4/15/13
SCALE: N.T.S.
DWG. BY: JK
CHK. BY: LFS
DRAWING NO.: FL-15260.11
SHEET 3 OF 3

© 2013 R.W. Building Consultants Inc.

Z:\2023 FBC Drawings\ODL, Inc\FL-15260 R11\FL-15260.9-12.dwg